FUCHS High-Tech Lubricants

Innovation and expertise

Lubricants for railways

OUR LUBRICANTS KEEP THE WORLD MOVING

For more than 80 years, we have been concentrating all our activities and research efforts on the development of innovative lubricants. This specialization means that we are enjoying continuous growth – geographically, technically and in the number of application areas.

Today, FUCHS is a German company that offers powerful lubricants and related specialties worldwide in practically all areas of application and industries.

What makes our products more valuable.

We develop lubricants on an application-specific basis and tailored to our partners' processes. Together, we look for the best lubricant for our customers. This type of collaboration is unique in its form, scope and intensity. We call it a development partnership. This ability is based on one key feature: As a German company with its headquarters in Mannheim, we are the largest independent lubricant specialist, and this independence makes all the difference. We are open to new methods and visionary approaches – a prerequisite for innovations. And innovations are a FUCHS trademark.

Together, we can move more.

FUCHS lubricants for railways

Greases for optimum safety and performance in the rail transport sector.

Whether passenger or freight carriage, high speed or heavy freight trains: the technical challenges that modern rail vehicles face are vast. Longer and longer routes, often accompanied by extreme temperature fluctuations, and extended maintenance intervals truly test the smooth interaction of highly stressed mechanical components in the rail transport sector.

The key here is to ensure absolute reliability of all safety-relevant components such as axleboxes, cardan shafts or brakes.

However, safety and reliability are not the only issues, as emphasis must also be placed on the economic efficiency of the means of transport deployed.

With their innovative wear and corrosion protection, as well as their mechanical resistance, the latest high-tech greases play a key part, even under the harshest of conditions.

FUCHS offers a wide range of grease solutions, which also serve for rationalization of grease types. Highly specialized universal greases guarantee the highest quality standards and availability for high speed and heavy freight trains in one single product.

However, we also develop application-specific, tailor-made greases in close cooperation with our customers which are perfectly matched to the respective requirements.

Thanks to our many years of application experience in the field of rail vehicles, FUCHS offers a large number of greases with proven track records for deployment even under the harshest conditions. Our greases are subject to regular checks and monitoring. In addition to this, every single batch of grease for sensitive applications such as axleboxes or brake systems is checked individually in our ultra-modern laboratory to ensure that it meets the key requirements.

Our RENOLIT series offers you a balanced, full range of greases for high-speed trains, locomotives, as well as passenger and freight trains to ensure optimum technical and economic solutions.

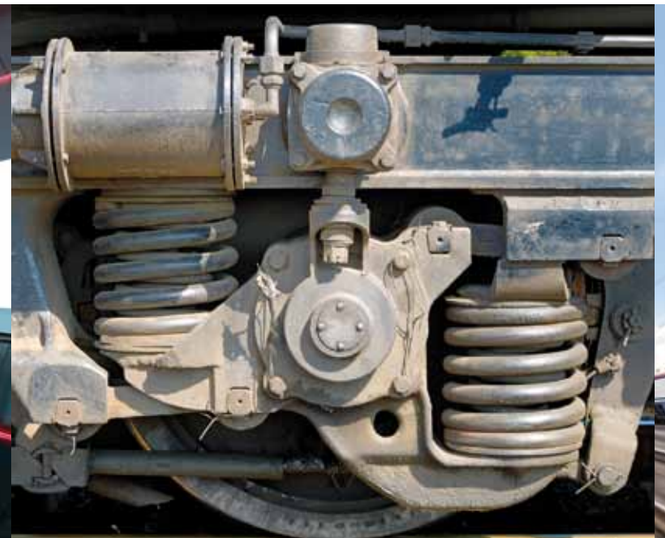

Greases for optimum safety and performance in the rail transport sector.

Axleboxes

As the interface between wheelsets and bogie frames, axlebox bearings have an extremely important function and must meet a large number of technical requirements in rail vehicles. Indeed, extremely strict safety requirements are placed on both the axlebox and the grease used, which is rated accordingly as „Quality Testing Class I“.

The axlebox consists of bearing housing, roller bearing, sealing and grease. The grease is an important design element that performs a critical task here. Depending on the type of wheelset, cylindrical roller bearings, tapered roller bearings or even spherical roller bearings are used. In this variance, the bearing is subject to high radial forces and therefore generally has special internal polyamide cages fitted for axlebox applications.

Due to the growing trend of using high speed and heavy freight trains for ever longer routes in the rail transport sector, modern axleboxes must offer a longer service life while handling ever greater loads and stresses in terms of weight and temperature.

Highly specialized axlebox greases have an influence on both safety and profitability. RENOLIT greases from FUCHS fulfil the quality standards as per EN 12081. This has been confirmed by an external testing laboratory.

The latest development is to use a single grease for all types of axleboxes and rail vehicles up to a speed of 300 kph (186 mph).

FUCHS is setting new standards in this regard with its semi-synthetic grease RENOLIT UNIRAIL 2.

RENOLIT

Grease requirement profile testing for railway applications.

All greases from FUCHS are comprehensively and thoroughly tested in our research laboratory and following their introduction they are also subject to a defined 100% batch inspection. In addition to this, the suitability of the greases for railway applications is confirmed by an external laboratory. Before an axlebox grease can be approved and released, the basic properties of the grease must first be tested for compliance with EN 12081. Here, the mechanical stability, the corrosion and wear-protection properties, the oil separation and the low temperature properties are all tested.

The mechanical stability of the grease is evaluated based on the shear resistance after 100,000 double strokes (Pw 100,000) and the grease leakage due to continuous shocks and vibrations in the form of strikes on the axlebox while the grease leakage is measured (V2F test).

The corrosion protection properties are tested with distilled water using the Emcor test. The corrosive attack on the outer bearing ring in contact with water is evaluated after approximately 7 days.

The bearing grease lubrication capability and wear protection are determined in FE8 test runs. Following test runs applying defined bearing speeds, temperatures and axial loads, the wear on both the roller bearings and cages is determined.

A static oil separation for bearing supply and low temperature properties down to at least -20°C are also defined. The low temperature suitability is assessed with regard to the stiffer consistency at correspondingly low temperatures. Like all construction elements of an axlebox, the greases are tested under extreme conditions for their specific fields of deployment on a complex test rig employing extreme conditions as per EN 12082. In addition to this an extensive field test with the new grease is performed in line with EN 12082 in corresponding axlebox bearings.

FUCHS is certified to the highest quality standards of ISO 9001:2008 and ISO/TS 16949:2009 and has established itself as a reliable partner, particularly to the automotive and railway industries, over many decades.

FUCHS lubricants for railways

The portfolio of greases from the specialists.

RENOLIT

Door guides / runners

RENOLIT WTF range
Fully synthetic low temperature greases for lubricating **gear motors with low power consumption, door guides** and **door runners.**

Door drive spindle

RENOLIT S 2
RENOLIT HI-SPEED 2
Fully synthetic low temperature greases for lubricating bearings **at high speeds, e.g. door drive spindles.**

Pantographs

RENOLIT HI-TEMP 100
RENOLIT WTF 2
Fully synthetic special greases for lubricating bearings of **pantographs.**

Train coupling

RENOLIT CA-LZ
Highly adhesive, water-resistant, calcium soap-based long-term lubricating grease for **train couplings** and used as **sealing grease.**

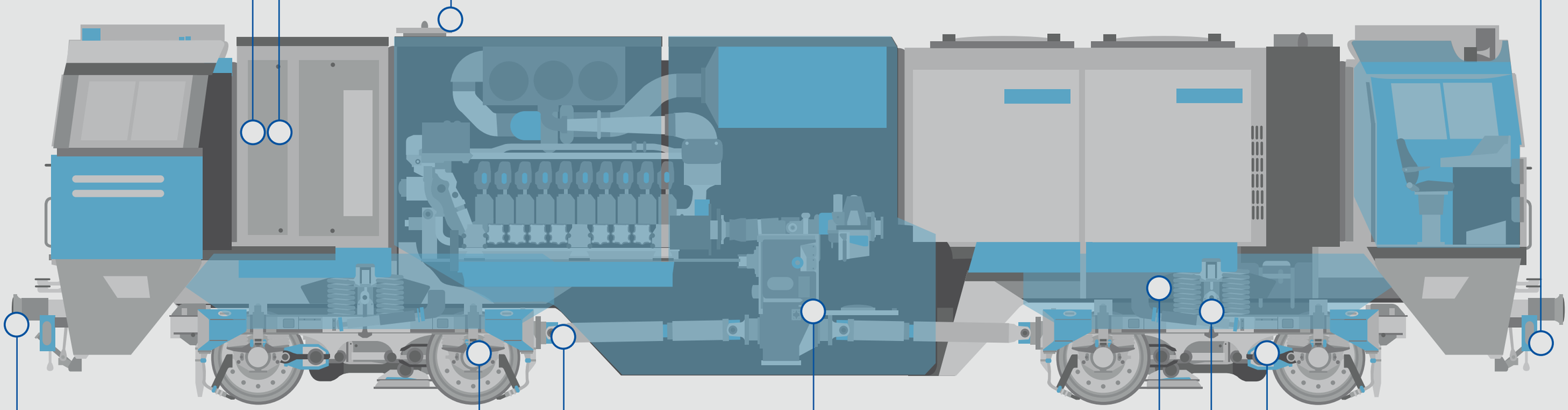

Buffer head

RENOLIT CX-HT 2
Heavy-duty grease with excellent wear and corrosion protection properties for lubricating **highly stressed roller and plain bearings, buffer heads, screws and pins.**

PLANTOGEL 2 FS
Quickly biodegradable heavy-duty grease with excellent wear and corrosion protection for lubricating **highly stressed roller and plain bearings, buffer heads, screws and pins.**

Axleboxes

RENOLIT UNIRAIL 2
Semi-synthetic **universal axlebox grease** for long-term lubrication of high-speed trains, locomotives, passenger and freight trains that travel at speeds of up to 300 kph (186 mph).

RENOLIT RS 2
Semi-synthetic lithium soap-based **axlebox grease** for lubricating wheelsets with tapered roller bearings on rail vehicles that travel at speeds of up to 250 kph (155 mph).
Approvals: DIN EN 12081

RADSATZROLLENLAGERFETT
Mineral oil-based grease on a lithium soap basis for lubricating **axleboxes** on passenger and freight trains that travel at speeds of up to 200 kph (125 mph).
Approvals: DIN EN 12081
DB material number 106225

Cardan shaft

RENOLIT LX-PEP range
Special lithium complex-based grease for long-term lubrication of **cardan shafts** in rail vehicles. Also for lubricating **traction motors and wheel bearings of buses.**
Approvals: Gewes, Deutsche Bahn, Voith, MAN, Siemens, ZF, Daimler, Schaeffler

RENOLIT LX-PEP 2
DB material number 873499

Curved tooth coupling

RENOLIT SO-GFB
Mineral oil-based sodium semi-fluid grease for lubricating **curved tooth couplings and sealed transmissions.**
Approvals: Flender

RENOLIT EP X1
Special lithium soap and mineral oil-based grease with solid lubricants for lubricating **curved tooth couplings and sealed transmissions.**

Slewing ring

RENOLIT POLAR BLACK
Fully synthetic low temperature grease with good corrosion protection properties and solid lubricants for lubricating **highly stressed bearings and for slewing rings.**

Brake system

RENOLIT HLT 1
RENOLIT KBS 1
Fully synthetic lithium soap-based special greases for lifetime lubrication of pneumatic **brake systems.**
Approvals: Deutsche Bahn, Knorr Bremse, Wabco

RENOLIT HLT 1
DB material number 106212

Product highlights

RENOLIT UNIRAIL 2

RENOLIT UNIRAIL 2 is a semi-synthetic grease free of group 1 base oils and based on a lithium soap. RENOLIT UNIRAIL 2 contains additives for improved EP capacity, wear, corrosion and oxidation protection and a reduced coefficient of friction. RENOLIT UNIRAIL 2 is water-resistant and has a high degree of mechanical stability. The operating temperature range stretches from – 30 °C to +140 °C.

RENOLIT UNIRAIL 2 was developed as a universal grease for general lubrication of all kinds of axleboxes of rail vehicles that travel at speeds of up to 300 kph (186 mph). As a universal axlebox grease, it is suitable for use in high-speed trains, locomotives, passenger and freight trains.

Specifications	
Operating temperature	–30 °C to +140 °C
Dropping point	≥ 180 °C
NLGI grade	2
PW60 [0.1 mm]	265 – 295
Base oil viscosity at 40 °C	80 mm²/s
Base oil viscosity at 100 °C	8.6 mm²/s
Classification	KP 2 N-40
Colour	Light brown

RENOLIT RS 2

RENOLIT RS 2 is a semi-synthetic grease, based on a lithium soap and an oxidation stable base oil mixture that is free of group 1 base oils.

RENOLIT RS 2 offers particularly good shear stability, water resistance and corrosion protection, even to salt water. A highly effective combination of additives guarantees secure lubrication of rolling and plain bearings. The operating temperature range stretches from – 30 °C to +120 °C.

RENOLIT RS 2 was developed for long-term lubrication of axleboxes with tapered roller bearings for speeds of up to 250 kph (155 mph).

Approval: EN 12081

Specifications	
Operating temperature	–30 °C to +120 °C
Dropping point	≥ 180 °C
NLGI grade	2
PW60 [0.1 mm]	265 – 295
Base oil viscosity at 40 °C	83 mm²/s
Base oil viscosity at 100 °C	11.5 mm²/s
Classification	KP 2 K-30
Colour	Brown

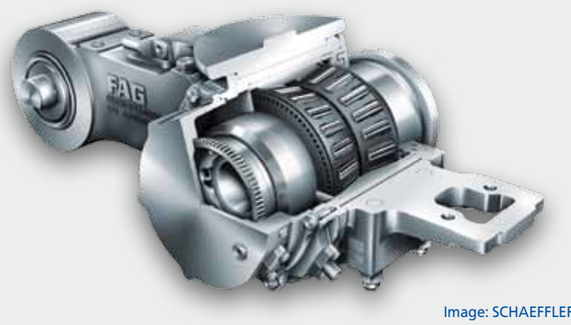

Image: SCHAEFFLER

RENOLIT LX-PEP 2

RENOLIT LX-PEP 2 is a lithium complex soap-based EP multipurpose grease with a broad temperature range. It offers a good load-carrying capacity, outstanding corrosion protection properties, even under unfavourable environmental influences (humidity, aggressive atmosphere and water) and a high degree of thermal resistance.

RENOLIT LX-PEP 2 is particularly well suited to lubricating cardan shafts in rail vehicles, and can also be used for lubricating the electric motor bearings of traction motors and wheel bearings of buses.

Approval: Cardan shaft grease with DB material number 873499 (previously 106 223), ZF, MAN, Daimler, SAF, Voith, Schaeffler, John Deere

Specifications	
Operating temperature	–30 °C to +150 °C
Dropping point	≥ 250 °C
NLGI grade	2
PW60 [0.1 mm]	265 – 295
Base oil viscosity at 40 °C	170 mm²/s
Base oil viscosity at 100 °C	14 mm²/s
Classification	KP 2 N-30
Colour	Green

RENOLIT HLT 1

RENOLIT HLT 1 is a fully synthetic lithium-soap-based grease for efficient permanent lubrication in the rail transport sector that has been optimized both for low temperature deployments and good elastomer compatibility.

RENOLIT HLT 1 is salt water resistant and offers easy start-up performance with consistent braking force and low oil separation in pneumatic brake systems.

Approval: Brake slide grease and grease for brake components with DB material number 106212, Wabco

Specifications	
Operating temperature	–50 °C to +140 °C
Dropping point	≥ 180 °C
NLGI grade	1
PW60 [0.1 mm]	310 – 340
Base oil viscosity at 40 °C	84 mm²/s
Base oil viscosity at100 °C	11.7 mm²/s
Classification	KPHC 1 N-50
Colour	Light brown

Image: BONDIOLI & PAVESI

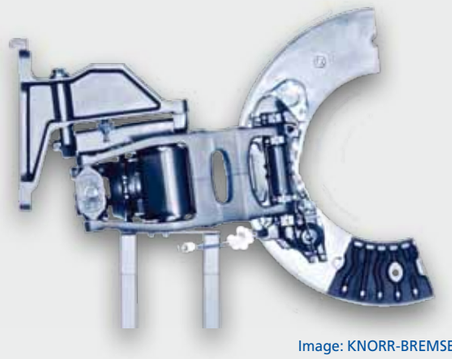

Image: KNORR-BREMSE

While the information and figures given here are typical of current production and conform to specification, minor variations may occur. Subject to amendments. Data as at: 08 / 2012

FUCHS lubricants for railways

The portfolio of oils from the specialists.

RENOLIN TITAN

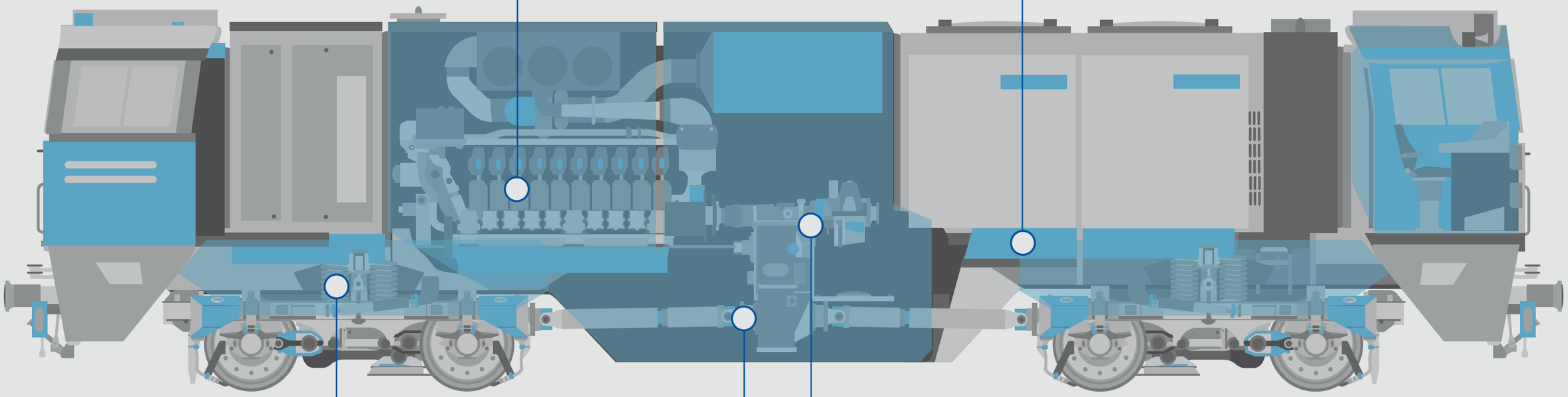

Engines

TITAN CARGO MAXX SAE 10W-40
TITAN CARGO LA SAE 10W-40

TITAN RAILGEN 13 SAE 20W-40
TITAN RAILGEN 13 SAE 40
(primarily intended for US design locomotives)

Compressed air supply

RENOLIN UNISYN OL range
RENOLIN COOL +
RENOLIN VDL range

Shock absorbers

TITAN SAF shock absorber oils

Transmissions

TITAN CYTRAC RR SAE 75W-90
TITAN CYTRAC MAN SYNTH SAE 75W-80

TITAN GEAR LS SAE 90

TITAN ATF 5005

Turbo coupling

RENOFLUID TF 1500

For use in control gears
RENOLIN UNISYN, PG, HighGear

For hydraulic travel drives
RENOLIN XtremeTemp, B HVI, PLANTOHYD, PLANTOSYN

For passenger compartment A/C systems
RENISO SE 55, RENISO SE 170

Product highlights

RENOLIN CH

High-grade cylinder oils, some of which have synthetic components for lubricating steam cylinders for maximum steam temperatures of up to around 380 °C.

RENOLIN UNISYN OL
RENOLIN COOL +

Fully or semi-synthetic compressor oils for heavy-duty compressors for the generation of compressed air; extended maintenance intervals possible.

RENOLIN UNISYN CLP
RENOLIN PG
RENOLIN HighGear SYNTH

Synthetic gear oils for lubricating heavy-duty helical, planetary, bevel or worm gears. Reduction of friction, temperature and wear.

RENOLIN Xtreme Temp
RENOLIN B HVI

Special hydraulic oils for use in varying ambient temperatures; highly aging-resistant, reduced energy consumption, increased efficiency. Extension of changing intervals possible.

RENISO TRITON SE 55
RENISO TRITON SE 170

Fully synthetic polyolester-based refrigerator oils – ideally suited to „non ozone-damaging“ CFC/HFC refrigerants. For lubricating air conditioning compressors.

RENOFLUID TF 1500

Mineral transmission oil for drives with hydrodynamic transducers or turbo couplings. Excellent aging and temperature resistance. Approved by VOITH TURBO for railway applications and other fluid couplings.

PLANTOGEAR S

Quickly biodegradable synthetic gear oil for transmission lubrication in environmentally-sensitive areas.

PLANTOHYD
PLANTOSYN

Fully synthetic, quickly biodegradable hydraulic oils; highly aging-resistant; for use in environmentally-sensitive areas.

FUCHS lubricants for railways

Product highlights

TITAN CARGO MAXX SAE 10W-40

Premium MAXX Performance engine oil with new XTL® technology. Offers very good cold-start properties and excellent aging resistance for additional fuel savings over the entire oil change interval.
Qualified for railway applications in line with:
ACEA E9/E7/E6, API CI-4, CATERPILLAR CAT ECF-1-a, MTU 3.1/1800, DB approval

TITAN CARGO LA SAE 10W-40

Fuel-saving ultra high performance engine oil.
Qualified for railway applications in line with:
ACEA E6/E7, API CI-4, MTU 3.1/1800

TITAN RAILGEN 13 SAE 20W-40
TITAN RAILGEN 13 SAE 40

Zinc-free and chlorine-free high performance diesel engine oil that has been specially developed to fulfil the requirements of diesel engines (also 2-stroke diesels) in rail vehicles.
Specially developed for US design diesel engines, which use friction bearings containing silver (optimum compatibility thanks to zinc-free and chlorine-free additive technology).
Qualified for railway applications in line with:
API CF/CD, GE Gen. 4LL, GM-EMD Gen. 5, LMOA Gen. 5, CATERPILLAR 3600

TITAN CYTRAC RR SAE 75W-90

Fully synthetic premium performance hypoid gear oil for axle drive applications in rail vehicles and commercial vehicles.
Qualified for railway applications in line with:
API GL-5, SAE J2360, VOITH TURBO 132.00374401 (formerly 3.325-340), VOITH TURBO 132.00374402 (formerly 3.325-342), ZF TE-ML 16F, Siemens-Flender, Gmeinder

TITAN CYTRAC MAN SYNTH SAE 75W-80

Premium performance gear oil for extended oil change intervals in automated ZF multi-speed transmissions (AS Rail), on the basis of fully synthetic base oils. Allows fuel savings through optimum transmission efficiency. Suitable for the longest oil change intervals and compatible with carbon synchronizers.
Qualified for railway applications in line with:
API GL-4, ZF 16K

TITAN GEAR LS SAE 90

High performance gear oil with LS (limited slip) additive for axle drives in rail vehicles with and without multi-disc LS-differentials.
Qualified for railway applications in line with:
API GL-5, ZF 16E

TITAN ATF 5005

Premium performance ATF for ZF Ecomat automatic transmissions. Excellent base oil quality for best low-temperature performance and high aging stability. Long-term stabilized friction properties for excellent clutch performance throughout the entire changing interval.
Qualified for railway applications in line with:
DEXRON IIIH, ZF 16L

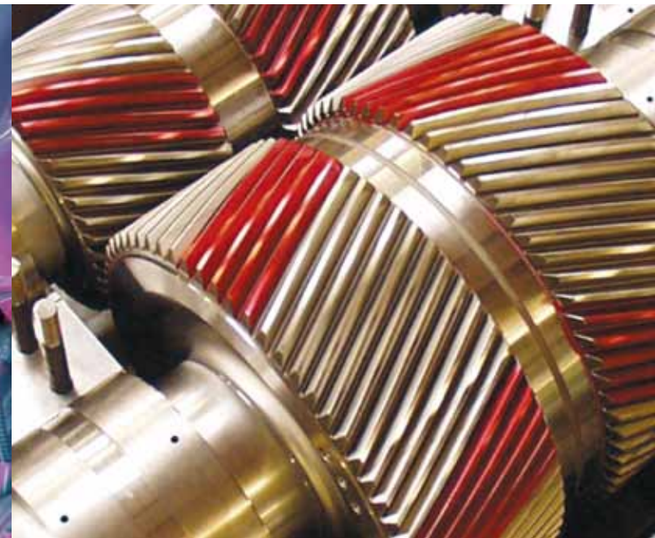

FUCHS high-tech lubricants

Innovative lubricants need experienced application engineers

Every lubricant change should be preceded by expert consultation on the application in question. Only then can the best lubricant system be selected. Experienced FUCHS engineers will be happy to advise on products for the application in question and also on our full range of lubricants.

Contact:

Note

The information contained in this product information is based on the experience and know-how of FUCHS EUROPE SCHMIERSTOFFE GMBH in the development and manufacturing of lubricants and represents the current state-of-the art. The performance of our products can be influenced by a series of factors, especially the specific use, the method of application, the operational environment, component pretreatment, possible external contamination, etc. For this reason, universally valid statements about the function of our products are not possible. The information given in this product information represents general, non-binding guidelines. No warranty expressed or implied is given concerning the properties of the product or its suitability for any given application.
We therefore recommend that you consult a FUCHS EUROPE SCHMIERSTOFFE GMBH application engineer to discuss application conditions and the performance criteria of the products before the product is used. It is the responsibility of the user to test the functional suitability of the product and to use it with the corresponding care.
Our products are subject to continuous further development. We therefore retain the right to change our product program, the products, and their manufacturing processes as well as all details of our product information sheets at any time and without warning. With the publication of this product information, all previous editions cease to be valid.

FUCHS EUROPE SCHMIERSTOFFE GMBH
Friesenheimer Straße 19
68169 Mannheim/Germany
Phone: +49 (0)621 3701- 0
Fax: +49 (0)621 3701- 570
E-mail: zentrale@fuchs-europe.de
www.fuchs-europe.de

930086914 08/2012 1.0